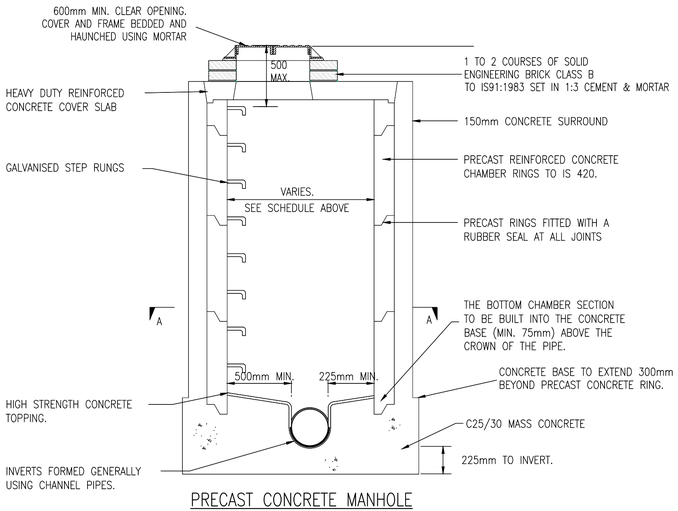

PRECAST CONCRETE MANHOLE
(UP TO 3.0m DEEP)

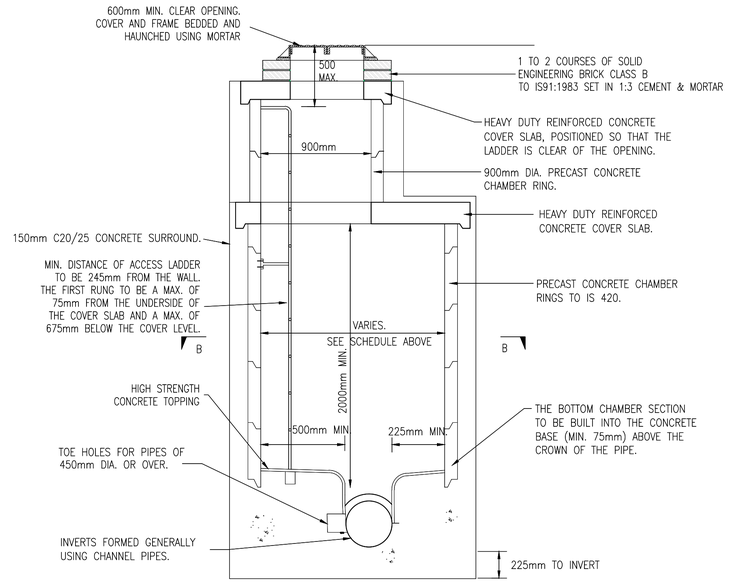

PRECAST CONCRETE MANHOLE DETAIL
(3.0m TO 6.0m)

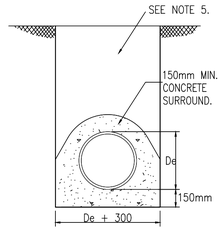

CONCRETE BED AND SURROUND
WHEN COVER IS LESS THAN 1.2m
UNDER ROADS AND FOOTPATHS

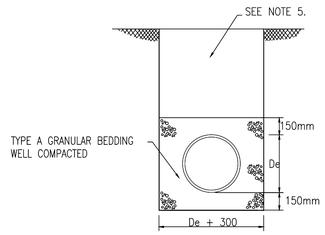

GRANULAR BED AND SURROUND

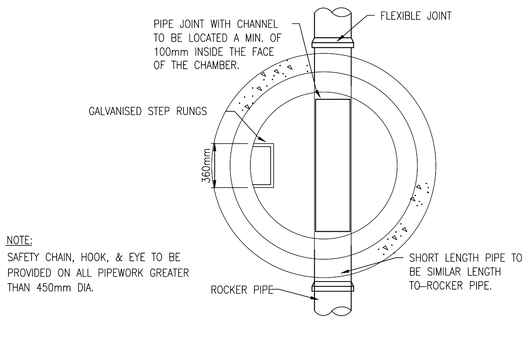

NOTE:
SAFETY CHAIN, HOOK, & EYE TO BE PROVIDED ON ALL PIPEWORK GREATER THAN 450mm DIA.

SECTION A – A

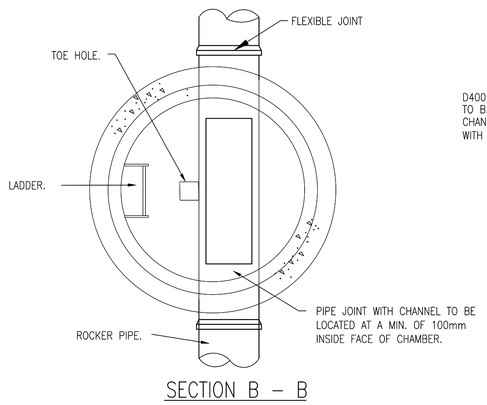

SECTION B – B

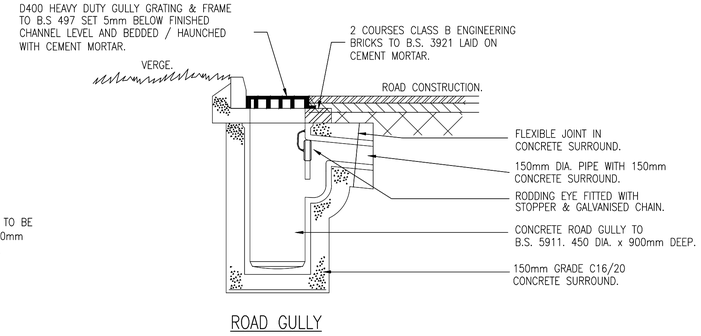

ROAD GULLY

DIAMETER OF LARGEST PIPE IN MANHOLE	PRECAST CONCRETE RING SIZE
LESS THAN 375mm	1200mm DIA
375mm TO 450mm	1350mm DIA
500mm TO 700mm	1500mm DIA
750mm TO 900mm	1800mm DIA
900mm TO 1200mm	2100mm DIA

NOTE:
SIZES GIVEN IN TABLE ABOVE ARE MINIMUM SIZED ASSUMING A STRAIGHT RUN AND A SINGLE CONNECTION THESE SIZES SHOULD BE INCREASED TO SUIT MULTIPLE CONNECTIONS AND ASSUMED SEWER ENTRY\EXITS.

This drawing should not be scaled. Dimensions to be verified on site.
Any discrepancies should be referred to the Engineer prior to work being put in hand.
This drawing is the property of Waterman Moylan Consulting Engineers Limited and is issued on the condition that it is not copied, reproduced, retained or disclosed to any unauthorized person, either wholly or in part without the consent in writing of
Waterman Moylan Consulting Engineers Limited
Block S East Point Business Park Dublin D03 H3F4 Ireland
t +353 1 664 8900

NOTES:

1. DO NOT SCALE. USE FIGURED DIMENSIONS ONLY.
2. THIS DRAWING IS TO BE READ IN CONJUNCTION WITH ALL OTHER RELEVANT ARCHITECTURAL AND ENGINEERING DRAWINGS.
3. TYPE A GRANULAR FILL SHALL CONSIST OF WASHED PEA GRAVEL. ALL MATERIAL SHALL PASS A 19mm B.S. SIEVE TEST AND SHALL BE RETAINED BY A 4.75mm B.S. SIEVE TEST.
4. SELECTED FILL SHALL SHALL BE FREE FROM STONES GREATER THAN 25mm IN SIZE, BUILDERS RUBBLE VEGETABLE MATTER AND LUMPS OF CLAY GREATER THAN 75mm IN SIZE AND SHALL BE COMPACTED IN 150mm LAYERS.
5. IN OPEN SPACES BACKFILL SHALL CONSIST OF SUITABLE SELECTED EXCAVATED MATER.
   UNDER PAVED AREAS BACKFILL SHALL CONSIST OF CLAUSE 808.
   GENERAL BACKFILL SHALL BE COMPACTED IN LAYERS NOT EXCEEDING 150mm THICK.
6. CONCRETE BED AND SURROUND SHALL BE USED ON ALL PIPES WHERE COVER TO THE SOFFIT OF THE PIPE IS LESS THAN 1.2m IN ROADS, FOOTPATHS AND GRASS MARGINS AND 0.9m IN OPEN SPACES AND FIELDS.
7. ALL CONCRETE FOR PIPE BEDDING, HAUNCHING AND SURROUNDS SHALL BE GRADE C16/20.
8. ALL MANHOLES SHALL BE WATERTIGHT TO THE SATISFACTION OF THE ENGINEER.
9. FORMWORK TO REINFORCED CONCRETE AND MASS CONCRETE SHALL BE CLASS F2.
10. CLASS U2 FINISH TO THE TOP OF SLABS. REINFORCEMENT TO SLABS TO ENGINEERS DETAILS.
11. 200mm THICK C25/30 MASS CONCRETE FOUNDATIONS. 225 THICK PRECAST R.C. ROOF SLAB IN C25/30 CONCRETE. COVER TO STEEL TO BE 40mm.
12. TOE HOLES TO BE PROVIDED IN BENCHING OF SEWERS GREATER THAN 450mm DIAMETER FOR ACCESS TO INVERT. SAFETY CHAIN ON SEWERS 600mm. DIAM. OR GREATER MILD STEEL SAFETY CHAIN SHALL BE 10MM. NOMINAL SIZE GRADE M(H) NON CALIBRATED CHAIN, TYPE 1, COMPLYING WITH BS4942 PART 2.
13. WHEN DEPTH OF MANHOLES TO INVERT IS GREATER THAN 3.5m, LADDERS SHALL BE USED INSTEAD OF RUNGS. FIXED LADDERS SHOULD MEET THE DIMENSIONAL REQUIREMENTS OF BS4211 EXCEPT THAT STRINGERS SHOULD NOT BE LESS THAN 65 X 20mm IN SECTION AND RUNGS 25mm IN DIAMETER.
14. LADDER STRINGERS SHOULD BE ADEQUATELY SUPPORTED FROM THE MANHOLE WALL AT INTERVALS OF NOT MORE THAN 3.0m STRINGERS SHOULD BE BOLTED TO CLEATS TO FACILITATE RENEWAL.
15. ALL LADDERS, RUNGS, HANDRAILS, SAFETY CHAIN, ETC. SHALL BE HOT DIPPED GALVANISED TO BS729.
16. ALL DRAINAGE WORKS SHALL BE CONSTRUCTED STRICTLY IN ACCORDANCE WITH FINGAL COUNTY COUNCIL REQUIREMENTS FOR TAKING IN CHARGE AND GREATER DUBLIN REGIONAL CODE OF PRACTICE FOR DRAINAGE WORKS

Rev	Date	Description	By	Chk

Amendments

Project
PHASE 2 RESIDENTIAL DEVELOPMENT AT KNOCKRABO, Mt. ANVILLE ROAD, DUBLIN 14

Title
STORM WATER DRANAGE CONSTRUCTION DETAILS

Client
KNOCKRABO INVESTMENTS DAC

waterman moylan

BLOCK S, EASTPOINT BUSINESS PARK, ALFIE BYRNE ROAD,
DUBLIN D03 H3F4 IRELAND. Tel: (01) 664 8900
Email: info@waterman-moylan.ie www.waterman-moylan.ie

Status: PLANNING

Designed By	Approved	Waterman Ref
RM	MD	20-086
Drawn By	**Date**	**Scales @ A1**
MS	MAY 2024	1:25

Project - Originator - Volume - Level - Type - Role - Number: KNB - WMC - PH2 - ZZ - DR - C - P126
Revision:

Drawing Location: M:\Projects\20\20-086 - Knockrabo\Drawings\Waterman Moylan\Civil\Planning\Autocad Drawings\20-086-P126 Storm Water Drainage Construction Details.dwg
Date: Oct 15, 2024 - 2:29pm